HORIZONTAL ACTION

MH6UB-BL

Material: Heavy gauge steel
Hardened pins and bushes
Finish: Chemi Blacked
Supplied with: M8x70mm spindle
Max holding force: 255daN
Weight: 0.37Kgs
Clamping pressure:

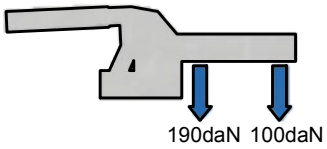
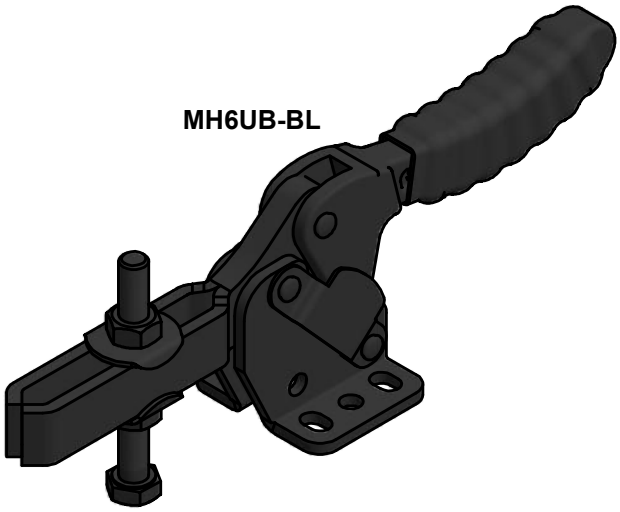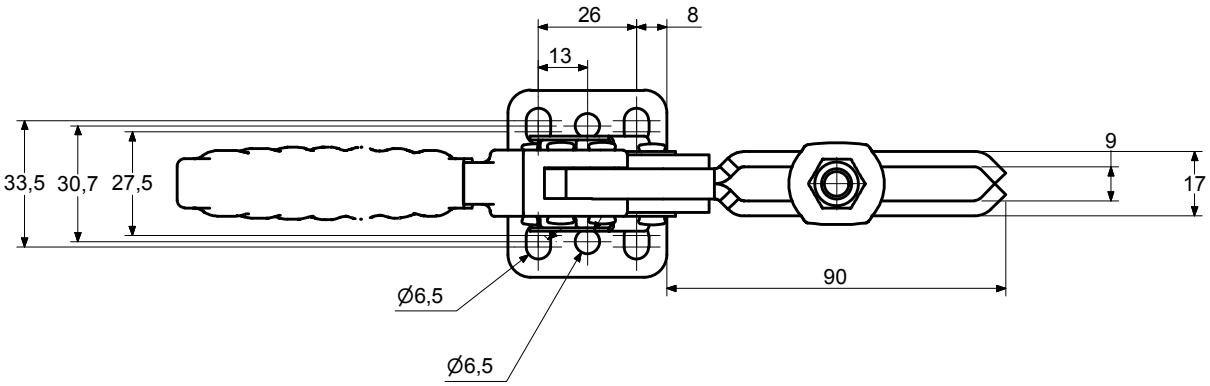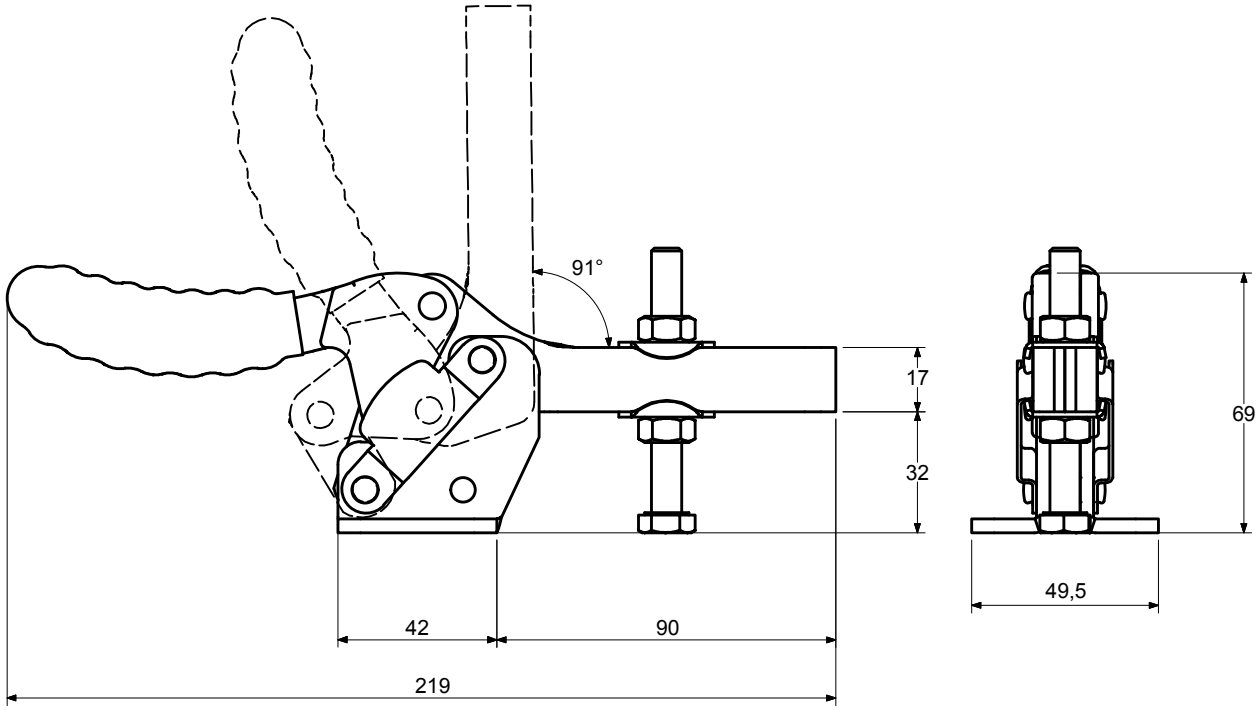
MH6UB-BL